Guaranteed Lab Grown Diamond Grading Certificate

Identification Data

April 29, 2022

LAB GROWN DIAMOND
Certificate No: 321120111

Gemprint *The fingerprint system for diamonds®*

Gemprint is the unique optical identification fingerprint of your lab grown diamond. Register your lab grown diamond fingerprint at www.Gemprint.com and receive insurance discounts up to 10%.

Laser Inscription

Girdle laser inscribed:
GCAL LG321120111
GROWN IN THE USA
PAT. 6,858,078
This illustration depicts the approximate appearance of the inscriptions

Certified SUSTAINABILITY RATED DIAMOND
SCS GLOBAL SERVICES

All certified diamonds come with an individual certificate, ONLY available at an accredited retailer

FOR THE SUSTAINABILITY RATED CERTIFICATE, SCAN HERE →

The 4Cs Grading Analysis

GCAL 321120111 — LAB GROWN DIAMOND*

Carat Weight:	1.00
Cut:	**Excellent**
Shape:	Princess
Measurements:	5.53x5.30x3.76mm
Optical Brilliance:	Excellent
Optical Symmetry:	Very Good
Polish:	Excellent
External Symmetry:	Very Good
Girdle Thickness:	Medium-Sl.Thick
Culet Size:	None
Color:	**G**
Fluorescence:	None
Clarity:	**SI1**
Identifying Characteristic(s):	Feather
Characteristic Location(s):	Crown Shoulder

*Comments: This laboratory grown diamond was created by the CVD (Chemical Vapor Deposition) method, and has the same chemical, physical, and optical properties as a mined diamond. This diamond is Type IIa, which means it is devoid of nitrogen impurities. As Grown - No evidence of post-growth treatment was detected.

Photomicrographs:

Actual images of the crown (top) and pavilion (bottom) of this diamond photographed at magnifications up to 10x.

Light Performance Profile

Optical Brilliance Analysis:

Brilliance is the overall return of light to the viewer. The brilliance image is a representation of (a) white areas of light return, or brilliance, and (b) dark-blue areas of light loss.

Optical Brilliance
Excellent

Optical Symmetry Analysis:

The colored areas of the symmetry image are indications of light handling ability, giving a visual representation of proportions and facet alignment.

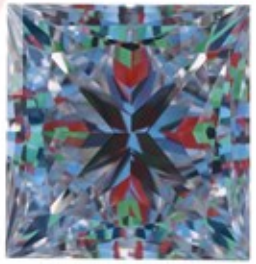

Optical Symmetry
Very Good

Proportion Diagram:

The proportion diagram illustrates the actual dimensions as recorded by optical scanning technology.

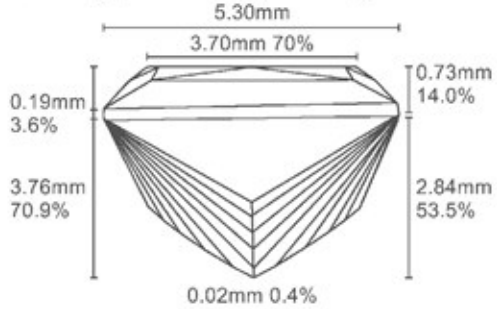

GCAL GEM CERTIFICATION & ASSURANCE LAB
ISO 17025 ACCREDITED FORENSIC LABORATORY

580 Fifth Ave LL-05
New York, NY 10036
T 212-869-8985
GCALUSA.com

ISO/IEC 17025 2017
ANAB L2177-1 Accredited Testing Lab

© Gem Certification & Assurance Lab, Inc.

ELECTRONIC COPY

© 2022 GCAL