Guaranteed Lab Grown Diamond Grading Certificate

## Identification Data

October 21, 2021

LAB GROWN DIAMOND
Certificate No: 312830029

**Gemprint** *The fingerprint system for diamonds®*

Gemprint is the unique optical identification fingerprint of your lab grown diamond. Register your lab grown diamond fingerprint at www.Gemprint.com and receive insurance discounts up to 10%.

### Laser Inscription

Girdle laser inscribed:
GCAL LG312830029
GROWN IN THE USA BY WD
PAT. 6,858,078
This illustration depicts the approximate appearance of the inscriptions

*Certified* SUSTAINABILITY RATED DIAMOND
SCS GLOBAL SERVICES

All certified diamonds come with an individual certificate, ONLY available at an accredited retailer

FOR THE SUSTAINABILITY RATED CERTIFICATE, SCAN HERE →

## The 4Cs Grading Analysis

GCAL 312830029 — LAB GROWN DIAMOND*

| | |
|---|---|
| **Carat Weight:** | 1.00 |
| **Cut:** | Excellent |
| Shape: | Princess |
| Measurements: | 5.47x5.43x3.96mm |
| Optical Brilliance: | Excellent |
| Optical Symmetry: | Very Good |
| Polish: | Excellent |
| External Symmetry: | Very Good |
| Girdle Thickness: | Sl.Thick |
| Culet Size: | None |
| **Color:** | I |
| Fluorescence: | None |
| **Clarity:** | VS2 |
| Identifying Characteristic(s): | Clouds/Crystals |
| Characteristic Location(s): | Crown Step-Crown Shoulder/Table |

*Comments: This laboratory grown diamond was created by the CVD (Chemical Vapor Deposition) method, and has the same chemical, physical, and optical properties as a mined diamond. This diamond is Type IIa, which means it is devoid of nitrogen impurities. As Grown - No evidence of post-growth treatment was detected.

### Photomicrographs:

Actual images of the crown (top) and pavilion (bottom) of this diamond photographed at magnifications up to 10x.

## Light Performance Profile

### Optical Brilliance Analysis:

Brilliance is the overall return of light to the viewer. The brilliance image is a representation of (a) white areas of light return, or brilliance, and (b) dark-blue areas of light loss.

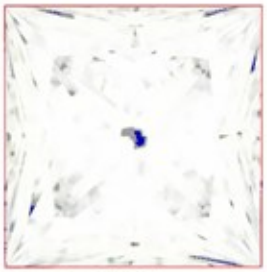

Optical Brilliance
Excellent

### Optical Symmetry Analysis:

The colored areas of the symmetry image are indications of light handling ability, giving a visual representation of proportions and facet alignment.

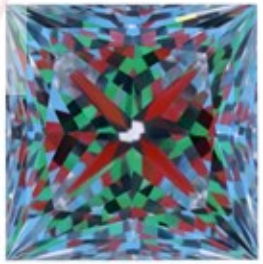

Optical Symmetry
Very Good

### Proportion Diagram:

The proportion diagram illustrates the actual dimensions as recorded by optical scanning technology.

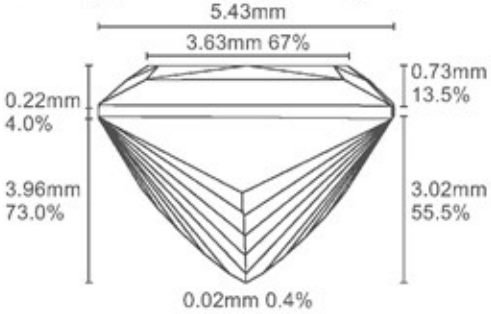


GCAL GEM CERTIFICATION & ASSURANCE LAB
ISO 17025 ACCREDITED FORENSIC LABORATORY

580 Fifth Ave LL-05
New York, NY 10036
T 212-869-8985
GCALUSA.com

ISO/IEC 17025 2017
ANAB L2177-1 Accredited Testing Lab

© Gem Certification & Assurance Lab, Inc.

ELECTRONIC COPY

© 2021 GCAL